FE7043WE

规格书（Datasheet）

文档版本（Document Version）：01

发布日期（Publication Date）：2025-06-03

服务热线（Service hotline）：4008-033-022

官方网站（Website）：www.flexem.com

1 Product Overview

1.1 Product introduction

Flexem 7000 Series HMIs are an upgraded version of the 6000 Series HMIs.It continues the high cost-performance ratio of the 6000 series touch screen, with an industrial ABS plastic shell that ensures low cost and high reliability.The new back cover design, optimized based on the 6000 series.Additionally, multiple resolution models are available to meet the needs of various application scenarios.

The FE7043WE is a product model of the 7000 Series HMIs that supports diverse orts,,including USB、DB-9 and Ethernet.

1.2 Product Appearance

2 Specifications

Category	Item	Description
Hardware	Display	4.3” 16:9 TFT LCD
	Resolution	800×480
	Colors	16-bit
	Brightness	250cd/m²
	Backlight	LED
	LCD Lifetime	50000 hours
	Touch Panel	4-wire industrial resistive touch panel
	CPU	Cortex-A7(main frequency is 1GHz,dual-core)
	Storage	128MB DDR3 + 128MB Flash
	RTC	Built-in
	Ethernet	1* 10M/100M self-adaptive RJ45 port
	SD Card	NA
	Bluetooth	NA
	USB Port	1*USB Type-C 2.0 OTG port
	Program Download Method	USB Slave/U disk/Ethernet
	Serial Port	COM1:RS232/RS485/RS422 COM2:RS485 COM3:RS232
	LCD Viewing Angles (T/B/L/R)	80° /80° /80° /80°
Electrical feature	Rated Power	< 5W
	Rated Voltage	DC24V, operational range: DC 9V~28V
	Power Protection	Lightning surge protection
	Power Interruption Tolerance	< 5ms
	CE&RoHS	EN61000-6-2:2019 and EN61000-6-4:2019 standards

Category	Item	Description
		certified;RoHS certified;lightning surge±1kV;group pulse±2kV;electrostatic contact 4kV,air discharge 8kV
Environmental requirements	Operating Temperature	0~50℃
	Storage Temperature	-20~60℃
	UV Resistance	Operating in high UV environment is prohibited(e.g.,in direct sunlight)
	Environmental Humidity	10%~90%RH(non-condensing)
	Vibration Endurance	10~25Hz(X/Y/Z direction,2G/30 minutes)
	Cooling Method	Natural air cooling
Mechanical feature	Protection Level	Front:IP65(with flush panel cabinet installation),Rear:IP20
	Enclosure Material	Engineering plastic
	Cutout Dimensions	132mm×80mm
	Dimensions	138mm×86mm×32mm
	Weight	About 300g

3 Wiring Definition

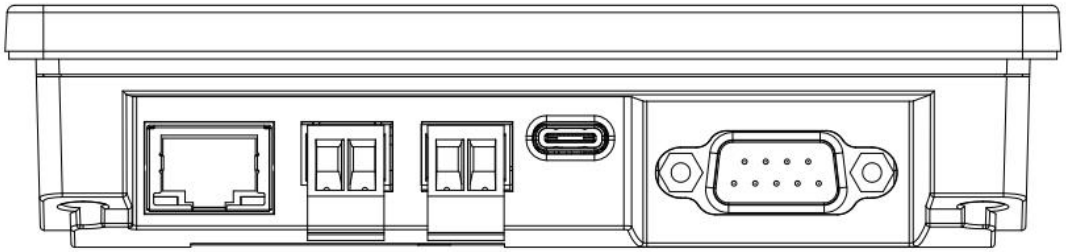

3.1 Power Terminal

Power Terminal (Pin 1~2 from left to right)	Pin	Description
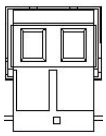	Pin1	0V
	Pin2	DC 24V

3.2 DB9 Serial Port

	Pin	COM1(RS485)	COM1(RS422)	COM1(RS232)	COM3(RS232)
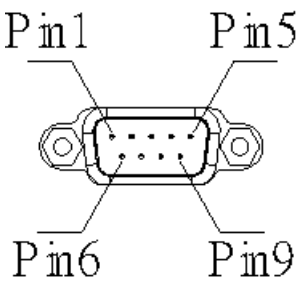	Pin1	B-	Rx-		
	Pin2			RxD	
	Pin3			TxD	
	Pin4		Tx-		
	Pin5	GND			
	Pin6	A+	Rx+		
	Pin7				RxD
	Pin8				TxD
	Pin9		Tx+		

3.3 RS485 Interface

RS485（Pin1~Pin2 from left to right）	Pin	Desciption

RS485（Pin1~Pin2 from left to right）	Pin	Desciption
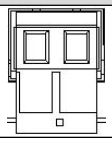	Pin1	A+（COM2 RS485）
	Pin2	B-（COM2 RS485）

3.4 Ethernet Port

RJ45 port for Ethernet communication with the controller or server.

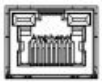

3.5 USB Type-A 2.0 OTG Port

USB Slave port, Used for program download.

USB Host port, Used for connecting peripheral devices,such as Flash drive or bar code scanner (needs equipping Type-C and USB Type-A conversion line).

4 Dimension

Unit：mm

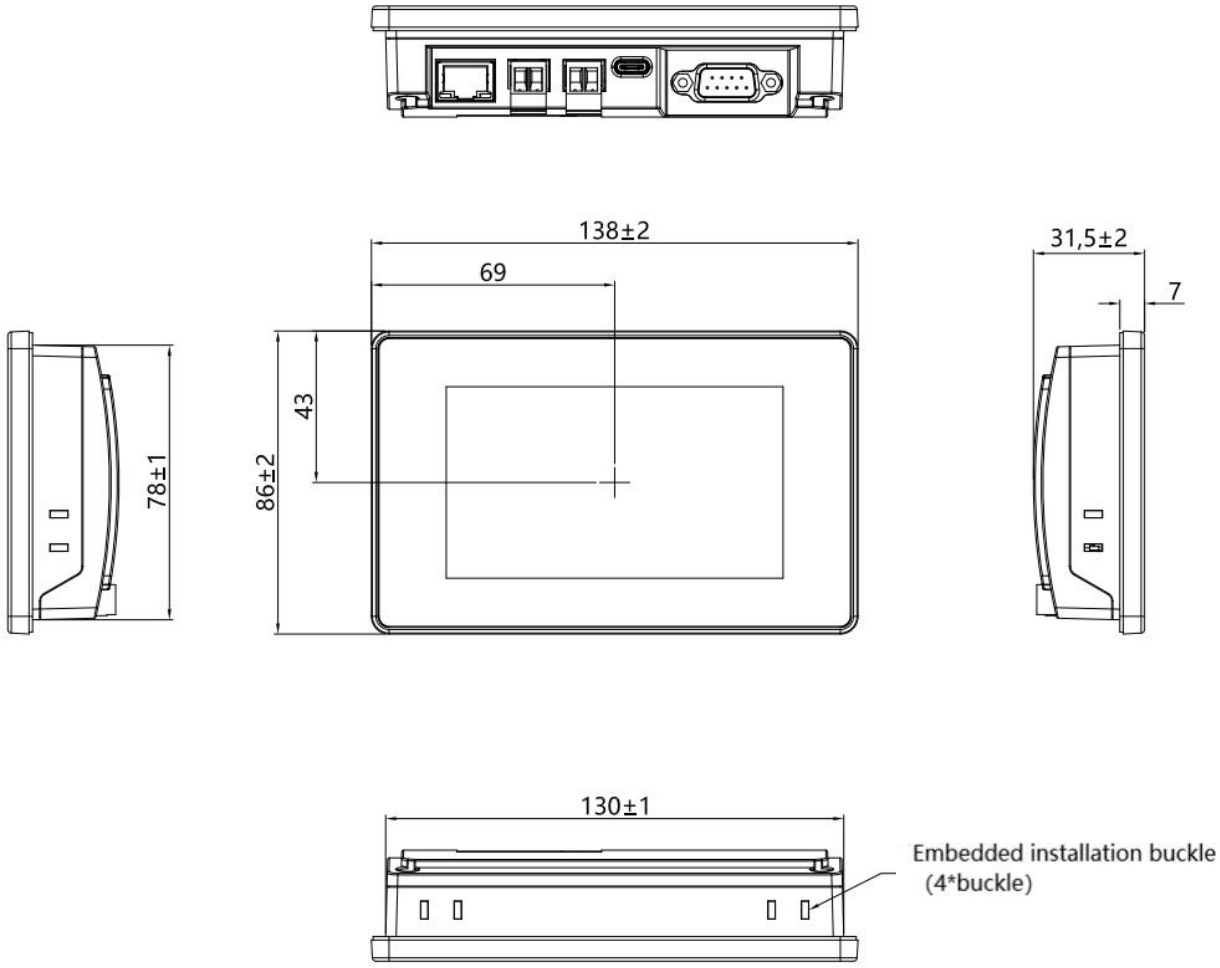

Flush-mounted installation cutout dimensions:132*80mm